DS-3WAP6230-EI
Wi-Fi 6 3000M Ceiling Access Point



DS-3WAP6230-EI is an indoor 802.11ax AP product with dual-frequency four-flow design, which meets the wireless coverage requirements of small, medium and micro enterprises.
Note: For optimal performance, EI Series APs should be used in conjunction with EI Series smart managed routers (AC) only, and vice versa.

- 1 × Gigabit PoE in RJ45 port,1 × Gigabit RJ45 port
- Wi-Fi 6 Dual Band 3000 Mbps
- Auto RF Optimization
- Wide Signal Coverage
- Reliable Wi-Fi Connection
- Outstanding Wall Penetration

▪ Specification

General	
Net Weight	0.4 kg (0.88 lb)
Gross Weight	0.64 kg (1.41 lb)
Installation Mode	Ceiling Mounting
Working Temperature	0°C to 40°C (32°F to 104°F)
Working Humidity	10% to 90% (no condensation)
Storage Temperature	-40°C to 70°C (-40°F to 158°F)
Storage Humidity	5% to 95% (no condensation)
Product Dimensions (W × H × D)	Ø220 mm × 49.7 mm (excluding bracket)
Packing List	3000 M Access Point × 1, Screw Pack × 1, Installation bracket × 1, Quick Start Guide × 1, Regulatory Compliance and Safety Information × 1
Power Supply Method	DC power supply: 12 V, 2 A; PoE power supply: IEEE 802.3at;
Power Consumption	Standby Power Consumption: 5.5W Typical Power Consumption: 11W Maximum Power Consumption: 18W
Wireless Parameter	
Wireless Speed	Max.: 2976 Mbps 2.4 GHz: 574 Mbps 5 GHz: 2402 Mbps
Wireless Standard	Wi-Fi 6
Working Frequency Band	Radio 1: 5G; Radio 2: 2.4G ; (Note: Available channel may vary with local regulations.)
Bandwidth	2.4G: Auto/20/40 MHz; 5G: Auto/20/40/80/160 MHz;
Recommended Coverage Range	Recommended Coverage Range: 140 m², the radius in an open environment is 50 meters. Note: The signal coverage range is greatly affected by the environment. For example, walls, glass doors, and other obstacles will affect the signal coverage. The above - mentioned values are for reference only.
Modulation	OFDM: BPSK @ 6/9 Mbps, QPSK @ 12/18 Mbps, 16-QAM @ 24 Mbps, 64-QAM @ 48/54 Mbps DSSS: DBPSK @ 1 Mbps, DQPSK @ 2 Mbps, and CCK @ 5.5/11 Mbps MIMO-OFDM: BPSK, QPSK, 16-QAM, 64-QAM, 256-QAM and 1024-QAM OFDMA
Max. Number of Connected Clients	256
Recommended Number of Connected Clients	110
Wireless Security	WPA2-PSK, WPA-WPA2-PSK, WPA3-PSK, WPA2-WPA3-PSK
Transmitting Power	2.4G: Combined power: 28 dBm; 5G: Combined power: 30 dBm; Note: The actual transmission power varies according to regulations in different countries and regions;

Antenna	2.4 GHz: 2 built-in omnidirectional antennas 5 GHz: 3 built-in omnidirectional antennas
RF Design	Dual-radio 4 spatial streams 2.4G: 2 × 2, MU-MIMO 5G: 2 × 2, MU-MIMO
Antenna Gain	2.4 GHz: 3.5 dBi 5 GHz: 4.5 dBi
FEM	2.4 GHz: 2 x eFEM 5 GHz: 3 x eFEM
Hardware Specifications	
Ports	1 × Gigabit PoE in RJ45 port, 1 × Gigabit RJ45 port
RESET	1 × Reset button
Software Specifications	
Max. Number of Wireless SSIDs	8
Internet Access Mode	DHCP,Static
VLAN ID Range	1~4000
Max. Number of VLANs	8
Managed AP Capacity	64
Software Features	
Operation Mode	AP mode (default); Routing mode;
Wireless Management	Support wireless configuration; Support RF configuration; Support Health Mode; Support guest SSID; Support wireless 802.11k/v/r roaming; Support wireless optimization; Support wireless SSID speed limit; Support wireless RF speed limit; Support wireless intelligent speed limit; Support wireless terminal speed limit; Support weak signal access control; Support weak signal to kick offline; Support roaming sensitivity adjustment; Support wireless access control; Support wireless terminal association; Support Band steering; Support AP load balancing; Supports airtime scheduling (ATF); Support smart antenna technology (beamforming), improving the signal's strength on clients; Support Wireless MESH; Support LeaderAP; Support Layer 2 Isolation; Support 5G Priority;

Interface	Support uplink port VLAN; Support MAC address modification; Support LAN configuration; Support Port VLAN; Support QoS;
IP Services	Support DHCP Client; Supports DHCP Server; Support LLDP; Support SADP;
Service and Support	Support NAT Traversal; Support Audit Log; Support Fault Diagnosis; Support Fault Alarm; Support One-Click Fault Collection; Support Network Diagnostic Tools; Support SSH; Support Cloud Service Diagnosis; Support Local Upgrade; Support Online Upgrade; Support Cloud Service; Support App Management; Support CAPWAP DTLS encryption;
Portal Authentication	Support Portal Authentication;
Approval	
EMC	CE-EMC (EN 55032:2015/A1:2020 EN 55035:2017/A11:2020 EN IEC 61000-3-2:2019/A2:2024 EN 61000-3-3:2013/A2:2021 EN 50130-4:2011/A1:2014)
Safety	CB (IEC 62368-1: 2018), CE-LVD (EN IEC 62368-1: 2020+A11: 2020)
Chemistry	CE-RoHS (2011/65/EU), WEEE (2012/19/EU), Reach (Regulation (EC) No.1907/2006)
Radio	EN 300 328, EN 300 440, EN 301 893, EN 301 489-1, EN 301 489-3, EN 301 489-17, EN 61000-3-3: 2013+ A1:2019+A2: 2021, EN IEC 61000-3-2: 2019+A1: 2021+A2: 2024, EN IEC 62311: 2020

▪ Dimension

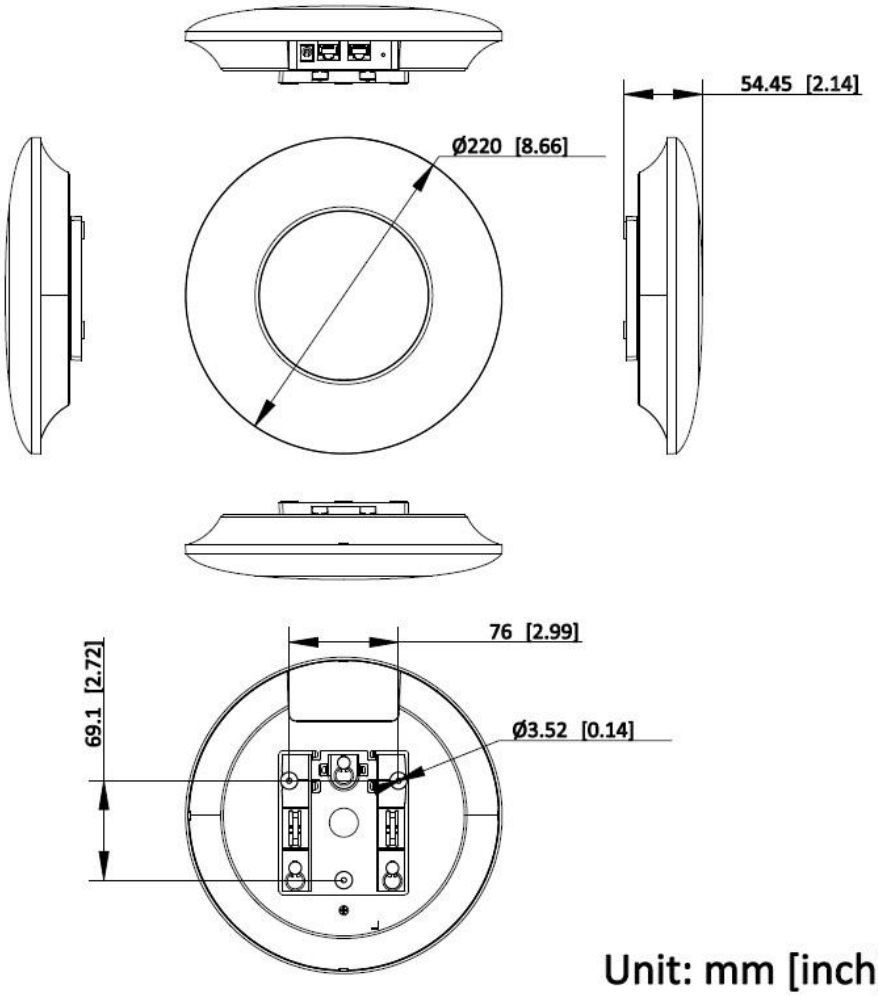

Unit: mm [inch]

SCALE	1:1

See Far, Go Further

www.hikvision.com
support@hikvision.com

© Hangzhou Hikvision Digital Technology Co., Ltd. Unless otherwise agreed, Hikvision makes no warranties, express or implied. We reserve the right to introduce modifications without notice.

HIKVISION®