DS-3WAP5212-EI
Wi-Fi 5 1200M Ceiling Access Point



DS-3WAP5212-EI is an indoor 802.11ac AP product with dual-frequency four-flow design, which meets the wireless coverage requirements of small, medium and micro enterprises.
Note: For optimal performance, EI Series APs should be used in conjunction with EI Series smart managed routers (AC) only, and vice versa.

- 1 × Gigabit PoE in port,1 × Gigabit RJ45 port
- 802.11ac Wave 2 1200 Mbps
- Auto RF Optimization
- Wide Signal Coverage
- Reliable Wi-Fi Connection
- Outstanding Wall Penetration

▪ Specification

General	
Net Weight	0.36 kg (0.79 lb)
Gross Weight	0.6 kg (1.32 lb)
Installation Mode	Ceiling Mounting
Working Temperature	0°C to 40°C (32°F to 104°F)
Working Humidity	10% to 90% (no condensation)
Storage Temperature	-40°C to 70°C (-40°F to 158°F)
Storage Humidity	5% to 95% (no condensation)
Product Dimensions (W × H × D)	Ø220 mm × 49.7 mm (excluding bracket)
Power Supply Method	DC power supply: 12 V, 1.5 A; PoE power supply: IEEE 802.3at;
Packing List	1200 M Access Point × 1, Screw Pack × 1, Installation bracket × 1, Quick Start Guide × 1, Regulatory Compliance and Safety Information × 1
Power Consumption	Standby Power Consumption: 4W Typical Power Consumption: 9W Maximum Power Consumption: 18W
Wireless Parameter	
Wireless Speed	Max.: 1167 Mbps 2.4 GHz: 300 Mbps 5 GHz: 867 Mbps
Wireless Standard	Wi-Fi 5
Working Frequency Band	Radio 1: 5G (11a/n/ac); Radio 2: 2.4G (11b/g/n);
Bandwidth	2.4G: Auto/20/40 MHz; 5G: Auto/20/40/80 MHz;
Recommended Coverage Range	Recommended Coverage Range: 140 m², the radius in an open environment is 25 meters. Note: The signal coverage range is greatly affected by the environment. For example, walls, glass doors, and other obstacles will affect the signal coverage. The above -mentioned values are for reference only.
Modulation	OFDM: BPSK @ 6/9 Mbps, QPSK @ 12/18 Mbps, 16-QAM @ 24 Mbps, 64-QAM @ 48/54 Mbps DSSS: DBPSK @ 1 Mbps, DQPSK @ 2 Mbps, and CCK @ 5.5/11 Mbps MIMO-OFDM: BPSK, QPSK, 16-QAM, 64-QAM, 256-QAM
Max. Number of Connected Clients	128
Recommended Number of Connected Clients	80
Transmitting Power	2.4G: Combined power: 28 dBm; 5G: Combined power: 28 dBm; Note: The actual transmission power varies according to regulations in different countries and regions;
Wireless Security	WPA2-PSK, WPA-WPA2-PSK
Antenna	2.4 GHz: 2 built-in omnidirectional antennas 5 GHz: 2 built-in omnidirectional antennas

Antenna Gain	2.4 GHz: 3.5 dBi 5 GHz: 4.5 dBi
RF Design	Dual-radio 4 spatial streams 2.4G: 2 × 2, MU-MIMO 5G: 2 × 2, MU-MIMO
FEM	2.4 GHz: 2 x eFEM 5 GHz: 2 x eFEM
Hardware Specifications	
Ports	1 × Gigabit PoE in port, 1 × Gigabit RJ45 port
RESET	1 × Reset hole
Software Specifications	
Max. Number of Wireless SSIDs	7
Internet Access Mode	DHCP,Static
VLAN ID Range	1~4000
Max. Number of VLANs	8
Managed AP Capacity	8
Software Features	
Operation Mode	AP mode (default); Routing mode;
Wireless Management	Support wireless configuration; Support RF configuration; Support Health Mode; Support guest SSID; Support wireless 802.11k/v roaming; Support wireless optimization; Support wireless SSID speed limit; Support wireless RF speed limit; Support wireless intelligent speed limit; Support wireless terminal speed limit; Support weak signal access control; Support weak signal to kick offline; Support roaming sensitivity adjustment; Support wireless access control; Support wireless terminal association; Support Band steering; Support AP load balancing; Support smart antenna technology (beamforming), improving the signal's strength on clients; Support Wireless MESH; Support LeaderAP; Support Layer 2 Isolation; Support 5G Priority;
Interface	Support uplink port VLAN; Support MAC address modification; Support LAN configuration; Support Port VLAN;

IP Services	Support DHCP Client; Supports DHCP Server; Support LLDP; Support SADP;
Service and Support	Support NAT Traversal; Support Audit Log; Support Fault Diagnosis; Support Fault Alarm; Support One-Click Fault Collection; Support Network Diagnostic Tools; Support SSH; Support Cloud Service Diagnosis; Support Local Upgrade; Support Online Upgrade; Support Cloud Service; Support App Management; Support CAPWAP DTLS encryption;
Portal Authentication	Support Portal Authentication;
Approval	
EMC	CE-EMC (EN 55032:2015/A1:2020 EN 55035:2017/A11:2020 EN IEC 61000-3-2:2019/A2:2024 EN 61000-3-3:2013/A2:2021 EN 50130-4:2011/A1:2014)
Safety	CB (IEC 62368-1: 2018), CE-LVD (EN 62368-1:2014/A11:2017)
Chemistry	CE-RoHS (2011/65/EU), WEEE (2012/19/EU), Reach (Regulation (EC) No.1907/2006)
Radio	EN 300 328, EN 300 440, EN 301 893, EN 301 489-1, EN 301 489-3, EN 301 489-17, EN 61000-3-3: 2013+ A1:2019+A2: 2021, EN IEC 61000-3-2: 2019+A1: 2021+A2: 2024, EN IEC 62311: 2020

▪ Dimension

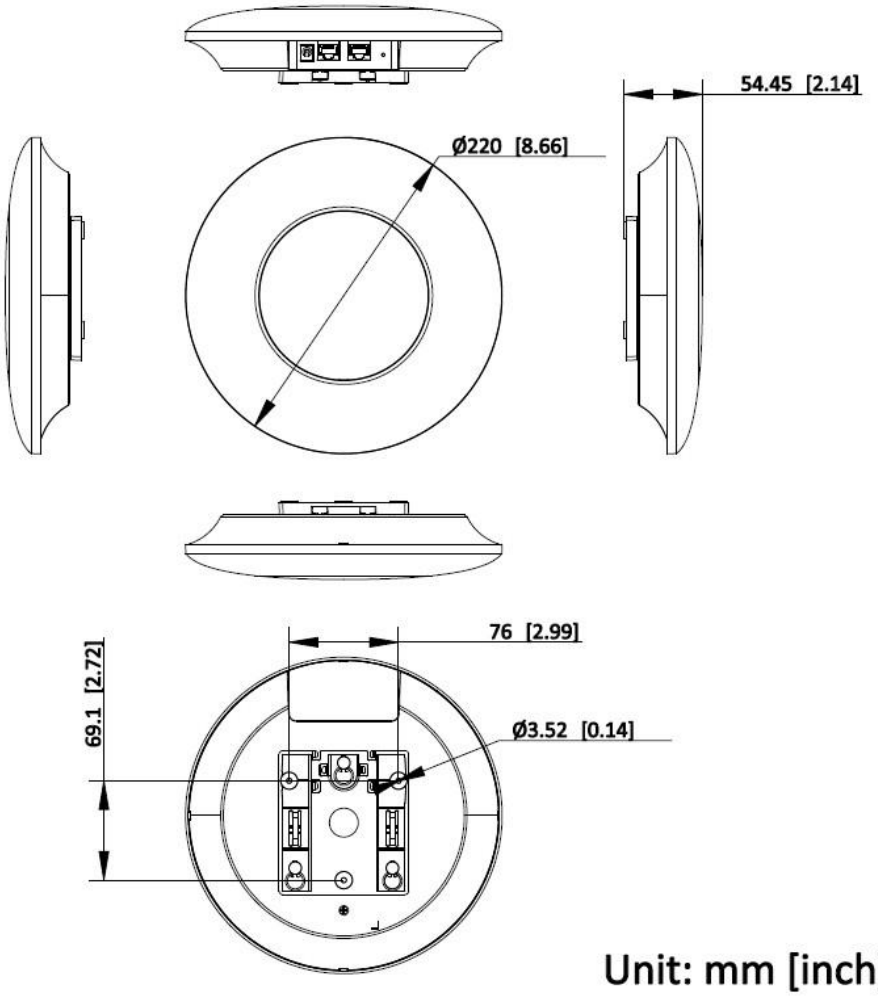

Unit: mm [inch]

SCALE	1:1

See Far, Go Further

www.hikvision.com
support@hikvision.com

© Hangzhou Hikvision Digital Technology Co., Ltd. Unless otherwise agreed, Hikvision makes no warranties, express or implied. We reserve the right to introduce modifications without notice.

HIKVISION®