English

INTEGRITY LED

LED SLIM CANOPY

▶ **DESIGN** - LED SLIM CANOPY has a die-cast aluminum housing with excellent heat dissipation and anti-glare PC lens with even light distribution. It is designed to operate on 120-277V circuits with a 0-10V dimmable driver. The fixture can be either surface mounted or pole mounted.

▶ **SURGE PROTECTION** - 5kV protects the fixture from voltage spikes and current surges.

▶ **COLOR AND POWER SELECTABLE** - You can choose either a 3,000K warm white, 4,000K cool white or 5,000K daylight color temperature, and change the power with a simple switch.

▶ **APPLICATION** - Perfect commercial or industrial solution for parking garages, gas stations, stairwells, passageways, underpasses, and many other applications. It is also Wet Locations rated.

▶ **ADVANTAGES** - With calculated lifespan with more than 50,000 hours, these fixtures are made to last decades under normal operation! Integrity LED provides a 5-year limited warranty along with ETL and DLC Premium certifications to guarantee top quality products and safety!

Catalog number	
Notes	
Type	



Wet Locations

IP65

Model	Watts	Voltage	Dimmable	Lumens	CCT	Finish	Dimensions (LxWxH)
IL-CAN05-A40BR	20/30/40W	120-277 V	0-10 V	5,538/6,054/6,061 lm	3CCT (3,000/4,000/5,000 K)	Bronze	10-1/16" x 10-1/16" x 3-5/16"
IL-CAN05-A70BR	40/60/70W	120-277 V	0-10 V	9,884/10,757/10,795 lm	3CCT (3,000/4,000/5,000 K)	Bronze	10-1/16" x 10-1/16" x 3-5/16"

PRODUCT SPECIFICATIONS:

Construction & Materials		
Housing	Aluminum	
Reflector	SPCC	
Lens	PC	
Finish	Bronze	
Weight	IL-CAN05-A40BR	4.6 lbs (2.1 kg)
	IL-CAN05-A70BR	5.1 lbs (2.3 kg)
Environmental system		
Work environment	Suitable for Wet Locations, IP65	
Operating temperature	-22°F to 122°F (-30°C to 50°C)	
L-70 Life	R > 36,000 hrs; C > 141,000	
Optical system		
Luminous flux	IL-CAN05-A40BR	5,538/6,054/6,061 lm
	IL-CAN05-A70BR	9,884/10,757/10,795 lm
Color temperature	3CCT switch (3,000/4,000K/5,000 K), 5,000 K by default	
CRI	> 80	
Dimming compatible controls		
Brand	Leviton	Lutron
Models	IP710-LFZ	MS-Z101
Regular and voluntary certifications		
5-year limited warranty		
DesignLights Consortium (DLC) listed (Classification: Premium)		
UL certified E473804		

Electrical system		
Input voltage	120-277 V	
Max input current	IL-CAN05-A40BR	0.4 A
	IL-CAN05-A70BR	0.65 A
Inrush current (Action time)	120 A (4 S)	
Off state power	0W	
Power consumption	IL-CAN05-A40BR	20/30/40W
	IL-CAN05-A70BR	40/60/70W
Power factor	> 0.9	
Output voltage	130 V	
Max output current	IL-CAN05-A40BR	0.32 A
	IL-CAN05-A70BR	0.55 A
Surge protection DM/CM	4 kV / 5 kV	

PACKAGE CONTENTS:

Description	Q-ty
LED Slim Canopy	1
Mounting plate (A)	1
Wire nut (B)	3
Self-tapping screw (C)	4
Anchor (D)	4
Box	1

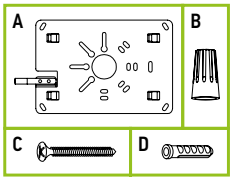

For the most up-to-date spec sheets, visit integrityled.info

INTEGRITY LED
Commercial LED Lighting

Web: integrityled.info
Phone: (830) 538-0991

English

INTEGRITY LED

LED SLIM CANOPY

INSTALLATION GUIDE

IMPORTANT SAFETY INFORMATION:

Please read all the instructions below before installation.

- Make sure that the supply voltage corresponds to the rated product voltage.
- The product must be installed by a qualified electrician in accordance with the National Electrical Code and corresponding local codes.
- If the product is damaged, do not use it.

SURFACE MOUNT WITH A MOUNTING PLATE:

1. Remove the securing screw out of the mounting plate, detach the mounting plate from the fixture housing and secure the plate to a j-box on the ceiling using anchors and self-tapping screws.
2. Adjust color temperature and power (if needed) by unscrewing one big cap in the corner of the fixture and set switches to necessary values.
3. Use hanger on the mounting plate to hold the fixture in place and connect the wires: Black to Black, White to White, Green to Green, Dim+ to Violet, Dim- to Pink and secure connection to the Junction box in the ceiling. Slide the fixture into the mounting plate clamps and secure it with a screw.

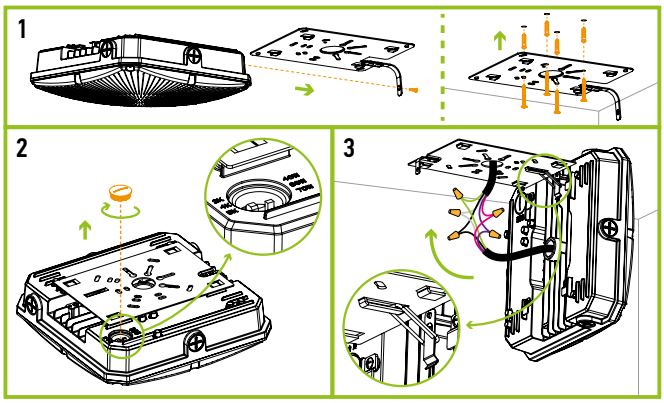

⚠ WARNING

RISK OF PERSONAL INJURY – READ and follow all WARNINGS and installation instructions. Keep or give to the owner for future reference.
Risk of cuts: Wear gloves to prevent cuts or abrasions when removing from carton, handling, installing, and maintaining this product.
Risk of electric shock: This product must be installed in accordance with the applicable installation code by a person familiar with the construction and operation of the product and the hazards involved.
Risk of Fire: Minimum 194°F supply conductors. Consult a qualified electrician to ensure correct branch circuit conductor.
Integrity LED assumes no responsibility for claims arising out of improper or careless Installation or handling of this product.

ELECTRICAL SCHEMATIC DIAGRAM:

CAN05

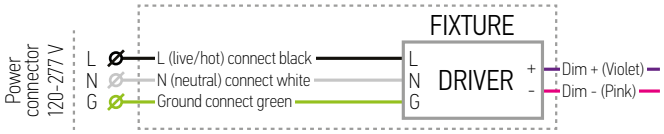

POLE MOUNTING INSTALLATION:

1. Adjust color temperature and power (if needed) by unscrewing one big cap in the corner of the fixture and set switches to necessary values.
2. Thread the wires into the pipe, and connect them with terminal caps: Black to Black, White to White, Green to Green, Dim+ to Violet, Dim- to Pink.
3. Screw the pipe into the fixture. Use NPT3/4" pipe.

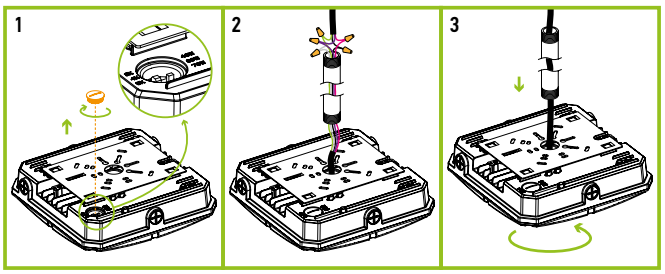

ORDERING INFORMATION

Model	UPC	Pcs. per carton	Carton size	Carton weight	UPC
IL-CAN05-A40BR	810128113489	4	24" x 12" x 10.2"	21.8 lbs	10810128113486
IL-CAN05-A70BR	810128114417	4	24" x 12" x 10.2"	23.6 lbs	10810128114414

For the most up-to-date spec sheets, visit integrityled.info

INTEGRITY LED
Commercial LED Lighting

Web: integrityled.info
Phone: (830) 538-0991