INTEGRITY LED

LED STRIPLIGHT FIXTURE

LSF8 series



DESIGN: LED STRIPLIGHT FIXTURE has a narrow, low-profile design. Durable commercial grade housing resistant to rust and impact along with an anti-glare PMMA lens provide many years of use. It is designed to operate on 120-277V or 200-480V circuits with a 0-10V dimmable driver.

VARIETY: The fixtures come in 2ft, 4ft and 8ft sizes. White and black finish options.

COLOR SELECTABLE: You can choose either a 3500K neutral white, 4000K cool white or 5000K daylight color temperature(depending on the model), and change the power with a simple switch.

APPLICATION: Perfect commercial or industrial solution for office buildings, schools, hospitals, hallways, stairwells, workshops, and many other applications. It is also Damp location rated.

ADVANTAGES: With calculated lifespan up to 174 000 hours, these fixtures are made to last decades under normal operation! Integrity LED provides a 5-year limited warranty along with UL and DLC Standard certifications to guarantee top quality products and safety!

OPTIONS:

MODELS WITH MOTION SENSOR BASE: The fixture has a built-in motion sensor base, allowing you to install the microwave motion sensor, which will turn off the fixture automatically when no motion is detected (sold separately).

MODELS WITH BATTERY BACK-UP: The built-in battery back-up provide 90 minutes of power in case of emergency.

White Black

FINISH

CLOSET RATED

Motion Sensor

Battery Back-up

PRODUCT PRESENTATION

MODEL	POWER	VOLTAGE	DIMMING	LUMENS	CCT	FINISH	DIMENSIONS	PRE-INSTALLED	CERTIFICATION
LSF8									
IL-LSF8-2A25WH	15/20/25W	120-277V	0-10V	3,249lm	3,500/4,000/5,000 K	White	24" x 2-11/16" x 3-1/8"	-	UL(E473804), DLC Premium
IL-LSF8-4A40BK	20/30/40W	120-277V	0-10V	5,866lm	3,500/4,000/5,000 K	Black	47-1/4" x 2-11/16" x 3-1/8"	-	UL(E473804), DLC Premium
IL-LSF8-4A40WH	20/30/40W	120-277V	0-10V	5,866lm	3,500/4,000/5,000 K	White	47-1/4" x 2-11/16" x 3-1/8"	-	UL(E473804), DLC Premium
IL-LSF8-4A70WH	50/60/70W	120-277V	0-10V	9,124lm	3,500/4,000/5,000 K	White	47-1/4" x 2-11/16" x 3-3/16"	-	UL(E473804), DLC Premium
IL-LSF8-8A80BK	55/75/80W	120-277V	0-10V	11,848lm	3,500/4,000/5,000 K	White	94-1/2" x 2-11/16" x 3-1/8"	-	UL(E473804), DLC Premium
IL-LSF8-8A80WH	55/75/80W	120-277V	0-10V	11,848lm	3,500/4,000/5,000 K	White	94-1/2" x 2-11/16" x 3-1/8"	-	UL(E473804), DLC Premium
IL-LSF8-8A150WH	100/130/150W	120-277V	0-10V	20,263lm	3,500/4,000/5,000 K	White	94-1/2" x 2-11/16" x 3-3/16"	-	UL(E473804), DLC Premium
LSF8 WITH Q-BASE									
IL-LSF8-2A25WH-QB	15/20/25W	120-277V	0-10V	3,263lm	3,500/4,000/5,000 K	White	24" x 2-11/16" x 3-1/4"	-	UL(E473804), DLC Premium
IL-LSF8-4A40WH-QB	20/30/40W	120-277V	0-10V	5,395lm	3,500/4,000/5,000 K	White	47-1/4" x 2-11/16" x 3-1/4"	-	UL(E473804), DLC Premium
IL-LSF8-8A80WH-QB	55/75/80W	120-277V	0-10V	11,386lm	3,500/4,000/5,000 K	White	94-1/2" x 2-11/16" x 3-1/4"	-	UL(E473804), DLC Premium
LSF8 WITH BATTERY BACK-UP									
IL-LSF8-2A25WH-8EM	15/20/25W	120-277V	0-10V	3,249lm	3,500/4,000/5,000 K	White	24" x 2-11/16" x 3-1/8"	8W Battery Back-up	UL(E473804), DLC Premium
IL-LSF8-4A40BK-10EM	20/30/40W	120-277V	0-10V	5,866lm	3,500/4,000/5,000 K	White	47-1/4" x 2-11/16" x 3-1/8"	15W Battery Back-up	UL(E473804), DLC Premium
IL-LSF8-4A40WH-10EM	20/30/40W	120-277V	0-10V	5,866lm	3,500/4,000/5,000 K	White	47-1/4" x 2-11/16" x 3-1/8"	15W Battery Back-up	UL(E473804), DLC Premium
IL-LSF8-8A80BK-15EM	55/75/80W	120-277V	0-10V	11,848lm	3,500/4,000/5,000 K	White	94-1/2" x 2-11/16" x 3-1/8"	15W Battery Back-up	UL(E473804), DLC Premium
IL-LSF8-8A80WH-15EM	55/75/80W	120-277V	0-10V	11,848lm	3,500/4,000/5,000 K	White	94-1/2" x 2-11/16" x 3-1/8"	15W Battery Back-up	UL(E473804), DLC Premium
LSF8 WITH Q-BASE AND BATTERY BACK-UP									
IL-LSF8-2A25WH-QB-8EM	15/20/25W	120-277V	0-10V	3,263lm	3,500/4,000/5,000 K	White	24" x 2-11/16" x 3-1/4"	8W Battery Back-up	UL(E473804), DLC Premium
IL-LSF8-4A40WH-QB-10EM	20/30/40W	120-277V	0-10V	5,395lm	3,500/4,000/5,000 K	White	47-1/4" x 2-11/16" x 3-1/4"	10W Battery Back-up	UL(E473804), DLC Premium
IL-LSF8-8A80WH-QB-15EM	55/75/80W	120-277V	0-10V	11,386lm	3,500/4,000/5,000 K	White	94-1/2" x 2-11/16" x 3-1/4"	15W Battery Back-up	UL(E473804), DLC Premium

For the most up-to-date spec sheets, visit integrityled.info

INTEGRITY LED
Commercial LED Lighting

Web: integrityled.info
Phone: (830) 538-0991

MODEL	POWER	VOLTAGE	DIMMING	LUMENS	CCT	FINISH	DIMENSIONS	PRE-INSTALLED	CERTIFICATION
LSF8 WITH MOTION SENSOR									
IL-LSF8-2A25WH-MS	15/20/25W	120-277V	0-10V	3,263lm	3,500/4,000/5,000 K	White	24" x 2-11/16" x 3-1/4"	Motion sensor	UL(E473804), DLC Premium
IL-LSF8-4A40WH-MS	20/30/40W	120-277V	0-10V	5,489lm	3,500/4,000/5,000 K	White	47"-1/4" x 2-11/16" x 3-1/4"	Motion sensor	UL(E473804), DLC Premium
IL-LSF8-8A80WH-MS	55/75/80W	120-277V	0-10V	11,610lm	3,500/4,000/5,000 K	White	94-1/2" x 2-11/16" x 3-1/4"	Motion sensor	UL(E473804), DLC Premium
LSF8 WITH MOTION SENSOR AND BATTERY BACK-UP									
IL-LSF8-2A25WH-MS-8EM	15/20/25W	120-277V	0-10V	1,373lm	3,500/4,000/5,000 K	White	24" x 2-11/16" x 3-1/4"	Motion sensor, 8W Battery Back-up	UL(E473804), DLC Premium
IL-LSF8-4A40WH-MS-10EM	20/30/40W	120-277V	0-10V	1,577lm	3,500/4,000/5,000 K	White	47"-1/4" x 2-11/16" x 3-1/4"	Motion sensor, 10W Battery Back-up	UL(E473804), DLC Premium
IL-LSF8-8A80WH-MS-15EM	55/75/80W	120-277V	0-10V	2,420lm	3,500/4,000/5,000 K	White	94-1/2" x 2-11/16" x 3-1/4"	Motion sensor, 15W Battery Back-up	UL(E473804), DLC Premium

TECHNICAL PARMETERS

MODEL	MAX INPUT CURRENT	INRUSH CURRENT	WORK ENVIRONMENT	OPERATING TEMPERATURE	POWER FACTOR	BEAM ANGLE	SURGE PROTECTION	HOUSING	LENS	CRI
LSF8										
IL-LSF8-2A25WH	0,56A	50A	Damp location	-4°F to 122°F(-20°C to 50°C)	>0,9	120°	2kV	Iron	PC	>80
IL-LSF8-4A40BK	0,56A	50A	Damp location	-4°F to 122°F(-20°C to 50°C)	>0,9	90°	2kV	Iron	PC	>80
IL-LSF8-4A40WH	0,56A	50A	Damp location	-4°F to 122°F(-20°C to 50°C)	>0,9	90°	2kV	Iron	PC	>80
IL-LSF8-4A70WH	1A	80A	Damp location	-4°F to 122°F(-20°C to 50°C)	>0,9	120°	6kV	Iron	PC	>80
IL-LSF8-8A80BK	1A	80A	Damp location	-4°F to 122°F(-20°C to 50°C)	>0,9	90°	6kV	Iron	PC	>80
IL-LSF8-8A80WH	1A	80A	Damp location	-4°F to 122°F(-20°C to 50°C)	>0,9	90°	6kV	Iron	PC	>80
IL-LSF8-8A150WH	2A	80A	Damp location	-4°F to 122°F(-20°C to 50°C)	>0,9	120°	6kV	Iron	PC	>80
LSF8 WITH Q-BASE										
IL-LSF8-2A25WH-QB	0,56A	50A	Damp location	-4°F to 122°F(-20°C to 50°C)	>0,9	120°	2kV	Iron	PC	>80
IL-LSF8-4A40WH-QB	0.56A	50A	Damp location	-4°F to 122°F(-20°C to 50°C)	>0,9	120°	2kV	Iron	PC	>80
IL-LSF8-8A80WH-QB	1A	80A	Damp location	-4°F to 122°F(-20°C to 50°C)	>0,9	120°	6kV	Iron	PC	>80
LSF8 WITH BATTERY BACK-UP										
IL-LSF8-2A25WH-8EM	0,56A	50A	Damp location	32°F to 122°F(0°C to 50°C)	>0,9	120°	2kV	Iron	PC	>80
IL-LSF8-4A40BK-10EM	0,56A	50A	Damp location	32°F to 122°F(0°C to 50°C)	>0,9	90°	2kV	Iron	PC	>80
IL-LSF8-4A40WH-10EM	0,56A	50A	Damp location	32°F to 122°F(0°C to 50°C)	>0,9	90°	2kV	Iron	PC	>80
IL-LSF8-8A80BK-15EM	1A	80A	Damp location	32°F to 122°F(0°C to 50°C)	>0,9	90°	6kV	Iron	PC	>80
IL-LSF8-8A80WH-15EM	1A	80A	Damp location	32°F to 122°F(0°C to 50°C)	>0,9	90°	6kV	Iron	PC	>80
LSF8 WITH Q-BASE AND BATTERY BACK-UP										
IL-LSF8-2A25WH-QB-8EM	0,56A	50A	Damp location	32°F to 122°F(0°C to 50°C)	>0,9	120°	2kV	Iron	PC	>80
IL-LSF8-4A40WH-QB-10EM	0,56A	50A	Damp location	32°F to 122°F(0°C to 50°C)	>0,9	120°	2kV	Iron	PC	>80
IL-LSF8-8A80WH-QB-15EM	1A	80A	Damp location	32°F to 122°F(0°C to 50°C)	>0,9	120°	6kV	Iron	PC	>80
LSF8 WITH MOTION SENSOR										
IL-LSF8-2A25WH-MS	0.56A	50A	Damp location	-4°F to 122°F(-20°C to °C)	>0,9	120°	2kV	Iron	PC	>80
IL-LSF8-4A40WH-MS	0.56A	50A	Damp location	-4°F to 122°F(-20°C to °C)	>0,9	120°	2kV	Iron	PC	>80
IL-LSF8-8A80WH-MS	1.00A	80A	Damp location	-4°F to 122°F(-20°C to °C)	>0,9	120°	6kV	Iron	PC	>80
LSF8 WITH MOTION SENSOR AND BATTERY BACK-UP										
IL-LSF8-2A25WH-MS-8EM	0.56A	50A	Damp location	32°F to 122°F(0°C to °C)	>0,9	120°	2kV	Iron	PC	>80
IL-LSF8-4A40WH-MS-10EM	0.56A	50A	Damp location	32°F to 122°F(0°C to °C)	>0,9	120°	2kV	Iron	PC	>80
IL-LSF8-8A80WH-MS-15EM	1.00A	80A	Damp location	32°F to 122°F(0°C to °C)	>0,9	120°	2kV	Iron	PC	>80

MAX QUANTITY OF FIXTURES TO BE CONNECTED TOGETHER

LINKABLE QUANTITIES DEPENDING ON VOLTAGE	MODEL				
	2ft	4ft		8ft	
	25 W	40 W	70 W	80 W	150 W
120V	15	10	5	4	2
200V	30	20	10	8	4
277V	40	25	13	12	6

DIMMING COMPATIBLE CONTROLS

BRAND	LUTRON	EATON	
Models	DVSTV-453P	DF10P	SF10P

ORDERING INFORMATION

MODEL	PRODUCT DIMENSIONS	WEIGHT	PCS. PER CARTON	CARTON SIZE	CARTON WEIGHT	UPC	GTIN 14
LSF8							
IL-LSF8-2A25WH	24" x 2-11/16" x 3-1/8"	1.8 lbs(0.8kg)	9	25.20" x 10.04" x 11.54"	20.1 lbs	81012811927	10810128119273
IL-LSF8-4A40WH	47-1/4" x 2-11/16" x 3-1/8"	2.9 lbs(1.3kg)	9	48.43" x 10.04" x 11.54"	33.2 lbs	81012811858	10810128118580
IL-LSF8-4A40BK	47-1/4" x 2-11/16" x 3-1/8"	2.9 lbs(1.3kg)	9	48.43" x 10.04" x 11.54"	33.2 lbs	81012811862	10810128118627
IL-LSF8-4A70WH	47-1/4" x 2-11/16" x 3-3/16"	2.9 lbs(1.3kg)	9	48.43" x 10.04" x 11.54"	33.2 lbs	81019020046	10810190200466
IL-LSF8-8A150WH	94-1/2" x 2-11/16" x 3-3/16"	5.5 lbs(2.5kg)	6	95.67" x 10.04" x 7.87"	41.9 lbs	81019020047	10810190200473
IL-LSF8-8A80BK	94-1/2" x 2-11/16" x 3-1/8"	5.5 lbs(2.5kg)	6	95.67" x 10.04" x 7.87"	41.9 lbs	81012811864	20810128118648
IL-LSF8-8A80WH	94-1/2" x 2-11/16" x 3-1/8"	5.5 lbs(2.5kg)	6	95.67" x 10.04" x 7.87"	41.9 lbs	81012811860	20810128118600
LSF8 WITH Q-BASE							
IL-LSF8-2A25WH-QB	24" x 2-11/16" x 3-1/4"	1.8 lbs(0.8kg)	9	25.20" x 10.04" x 11.54"	19.8 lbs	81012811924	10810128119242
IL-LSF8-4A40WH-QB	47-1/4" x 2-11/16" x 3-1/4"	2.9 lbs(1.3kg)	9	48.43" x 10.04" x 11.54"	33.1 lbs	81012811925	10810128119259
IL-LSF8-8A80WH-QB	94-1/2" x 2-11/16" x 3-1/4"	5.3 lbs(2.4kg)	6	95.67" x 10.04" x 7.87"	41.9 lbs	81012811926	10810128119266
LSF8 WITH BATTERY BACK-UP							
IL-LSF8-2A25WH-8EM	24" x 2-11/16" x 3-1/8"	2.4 lbs(1.1kg)	9	25.20" x 10.04" x 11.54"	25.3 lbs	81012811928	10810128119280
IL-LSF8-4A40BK-10EM	47-1/4" x 2-11/16" x 3-1/8"	3.5 lbs(1.6kg)	9	48.43" x 10.04" x 11.54"	38.4 lbs	81012811863	10810128118634
IL-LSF8-4A40WH-10EM	47-1/4" x 2-11/16" x 3-1/8"	3.5 lbs(1.6kg)	9	48.43" x 10.04" x 11.54"	38.4 lbs	81012811859	10810128118597
IL-LSF8-8A80WH-15EM	94-1/2" x 2-11/16" x 3-1/8"	6.0 lbs(2.7kg)	6	95.67" x 10.04" x 7.87"	45.5 lbs	81012811861	20810128118617
IL-LSF8-8A80BK-15EM	94-1/2" x 2-11/16" x 3-1/8"	6.0 lbs(2.7kg)	6	95.67" x 10.04" x 7.87"	45.5 lbs	81012811865	20810128118655
LSF8 WITH Q-BASE AND BATTERY BACK-UP							
IL-LSF8-2A25WH-QB-8EM	24" x 2-11/16" x 3-1/4"	2.6 lbs(1.2kg)	9	25.20" x 10.04" x 11.54"	26.9 lbs	81012811929	10810128119297
IL-LSF8-4A40WH-QB-10EM	47-1/4" x 2-11/16" x 3-1/4"	3.9 lbs(1.8kg)	9	48.43" x 10.04" x 11.54"	42.0 lbs	81012811930	10810128119303
IL-LSF8-8A80WH-QB-15EM	94-1/2" x 2-11/16" x 3-1/4"	6.5 lbs(3.0kg)	6	95.67" x 10.04" x 7.87"	48.2 lbs	81012811931	10810128119310
LSF8 WITH MOTION SENSOR							
IL-LSF8-2A25WH-MS	24" x 2-11/16" x 3-1/4"	1.8 lbs(0.8kg)	9	25.20" x 10.04" x 11.54"	19.7 lbs	81019020362	10810190203627
IL-LSF8-4A40WH-MS	24" x 2-11/16" x 3-1/4"	2.9 lbs(1.3kg)	9	48.43" x 10.04" x 11.54"	31.2 lbs	81019020363	10810190203634
IL-LSF8-8A80WH-MS	47-1/4" x 2-11/16" x 3-1/4"	5.6 lbs(2.5kg)	6	95.67" x 10.04" x 7.87"	41.5 lbs	81019020364	10810190203641
LSF8 WITH MOTION SENSOR AND BATTERY BACK-UP							
IL-LSF8-2A25WH-MS-8EM	47-1/4" x 2-11/16" x 3-1/4"	2.5 lbs(1.2kg)	9	25.20" x 10.04" x 11.54"	26.4 lbs	81019020365	10810190203658
IL-LSF8-4A40WH-MS-10EM	94-1/2" x 2-11/16" x 3-1/4"	4.0 lbs(1.8kg)	9	48.43" x 10.04" x 11.54"	40.9 lbs	81019020366	10810190203665
IL-LSF8-8A80WH-MS-15EM	94-1/2" x 2-11/16" x 3-1/4"	6.7 lbs(3.0kg)	6	95.67" x 10.04" x 7.87"	47.9 lbs	81019020367	10810190203672

ACCESSORIES

MODEL	PRODUCT DIMENSIONS	PCS. IN MIDDLE BOX	MIDDLE BOX SIZE	MIDDLE BOX WEIGHT	PCS. PER CARTON	CARTON SIZE	CARTON WEIGHT	UPC	GTIN 14 IN MIDDLE BOX	GTIN 14 IN CARTON
IL-09MW-WH	2-1/8" x 2-1/8" x 1-5/16"	10	10.2" x 2.8" x 1.6"	0.4 lbs	200	11.8" x 11" x 8.9"	11.4 lbs	810128119238	10810128119235	20810128119232
IL-06RC	5-11/16" x 1-3/4" x 13/16"	10	6.3" x 2.9" x 11.4"	0.5 lbs	60	15.8" x 11.8" x 9.3"	24.7 lbs	810128114370	30810128114371	40810128114378
IL-CB-LSF8-WH	2-3/16" x 2-3/16" x 1/16"	-	-	-	100	7.5" x 5.1" x 5.5"	4.6 lbs	810128119689	-	10810128119686
IL-CB-LSF8-BK	2-3/16" x 2-3/16" x 1/16"	-	-	-	100	7.5" x 5.1" x 5.5"	4.6 lbs	810128119696	-	10810128119693
IL-WG4-LSF8	47-1/16" x 3-3/16" x 3-1/4"	-	-	-	10	47.64" x 16.54" x 7.48"	24.3 lbs	81019020080	-	10810190200800

ACCESSORIES (sold separately)

MOTION SENSOR WITH CLIP-IN-BASE
Integrity LED IL-M22IR-WH



REMOTE CONTROL FOR MOTION SENSOR
Integrity LED IL-06RC



CONNNECTION BRACKET
Integrity LED IL-CB-LSF8-WH



CONNNECTION BRACKET
Integrity LED IL-CB-LSF8-BK



WIRE GUARD
Integrity LED IL-WG4-LSF8



ACCESSORY COMPATIBILITY LIST

MODELS \ ACCESSORIES		MOTION SENSOR WITH CLIP-IN-BASE IL-M22IR	CONNECTION BRACKET IL-CB-LSF8-WH IL-CB-LSF8-BK	WIRE GUARD IL-WG4-LSF8
IL-LSF8	2 ft		•	
	4 ft		•	•
	8 ft		•	
IL-LSF8-QB	2 ft	•	•	
	4 ft	•	•	•
	8 ft	•	•	
IL-LSF8-EM	2 ft		•	
	4 ft		•	•
	8 ft		•	
IL-LSF8-QB-EM	2 ft	•	•	
	4 ft	•	•	•
	8 ft	•	•	
IL-LSF8-MS	2 ft		•	
	4 ft		•	•
	8 ft		•	
IL-LSF8-EM-MS	2 ft		•	
	4 ft		•	•
	8 ft		•	

MOTION SENSOR INFORMATION



INFRARED MOTION SENSOR
IL-M22IR

+



REMOTE CONTROL
IL-06RC

CONSTRUCTION & MATERIALS	
Housing	Plastic
ENVIRONMENTAL SYSTEM	
Work environment	Suitable for Dry location
Operating temperature	-13°F to 140°F (-25°C to 60°C)
REGULAR AND VOLUNTARY CERTIFICATIONS	
5-year limited warranty	
DesignLights Consortium (DLC) listed (Classification: Standard)	

SPECIFICATIONS		DEFAULT SETTING
Detection area	25 %/50 %/75 %/100 %	100 %
Hold time	5 s/30 s/1 min/3 min/5 min/10 min/20 min/30 min	10 min
Daylight threshold	2 lux (0.2 fc)/10 lux (0.9 fc)/30 lux (2.8 fc)/50 lux (4.7 fc)/ 80 lux (7.4 fc)/ 120 lux (11.2 fc)/disable	Disable
Standby period	0 s/10 s/30 s/1 min/5 min/10 min/30 min/60 min/+ ∞	0 s
Standby dimming level	10 %/20 %/30 %/50 %	10 %

SPECIFICATIONS	
Operating voltage	10 - 15 V
Operating current	< 10 mA
Mounting height	max 13.1 ft (4 m)
Detection radius	11.5 ft - 16 ft (3.5 m - 5 m)

INFRARED MOTION SENSOR

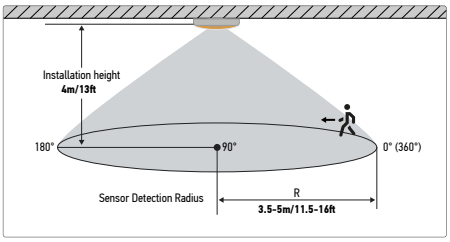

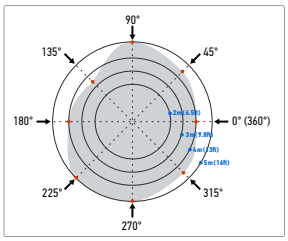

SENSITIVITY	0°/360°	45°	90°	135°	180°	225°	270°	315°
100% 4m	4	4.5	5	3.5	4	5	5	4.5

This diagram shows the area covered by the motion sensor.

The circles indicate the distance from the sensor, while different directions show how well motion is detected around it.

SENSOR USAGE RECOMMENDATIONS

INDOOR RECOMMENDED LOCATIONS
Places where the temperature of the environment is well controlled.
Places where detecting the movement of people is a high priority.

INDOOR NOT RECOMMENDED LOCATIONS
Places where environment temp close to human body.
Places where PIR sensor lens can get covered.

REMOTE CONTROL

sold separately



ON/OFF
turn on / turn off

SCENES
Shows current settings saved in remote

APPLY
Applies current scene settings to the fixture

DETECTION RANGE
Also known as "sensitivity", 100 % means the highest sensitivity and longest distance. Use this button and the +/- buttons to adjust

HOLD TIME
The period that light will stay illuminated 100 % after no motion is detected. Use this button and the +/- buttons to adjust

CCT SELECTABLE
Not applicable to this product

RESERVED BUTTON
Not applicable to this product

AUTO
Enter "sensor mode" and perform previous settings

START
Press this to begin scene setup

MOUNTING HEIGHT
Adjust detection area/sensitivity levels according to real installation situations, higher or lower

DAYLIGHT SENSOR
The preset lux level at which motion will be detected. Use this button and the +/- buttons to adjust

UP
The main functional buttons to adjust the factors to desired level. Press +/- button to dim light directly Auto in non-detection mode

DOWN
The main functional buttons to adjust the factors to desired level. Press +/- button to dim light directly Auto in non-detection mode

DAYLIGHT HARVESTING
Daylight harvesting function enabled or disabled

RESET
Enter "sensor mode" and perform the default settings

MEMORY
Saves the scene settings

SEND
Memorize and send out the previous setting of individual parameters

STAND-BY DIMMING
After hold time, the light will dim from 100 % to optional standby dimming levels. Use this button and the +/- buttons to adjust

STAND-BY PERIOD
The period after holdtime, during which the light keeps standby dimming level. Use this button and the +/- buttons to adjust

POWER
Adjust brightness in both ON/OFF mode & sensor mode, minimum 10%, max 100%, each time this button is pressed it changes by 5%

TEST BUTTON
Press this button to test the sensor; it will temporarily change the hold time to 2s. This setting cannot be saved

WITH DUSK/DAWN FUNCTION

1. With insufficient ambient brightness, sensor turns on light and keeps it at standby dimming level even if there is no motion or presence.
2. When sensor detects motion or presence it will bring the light level up to 100 %.
3. After motion is no longer detected, fixture remains at 100 % for hold time.
4. After the preset hold time period, it will dim to the standby dimming level and maintain it indefinitely.
5. With sufficient ambient brightness, sensor will turn OFF light automatically.

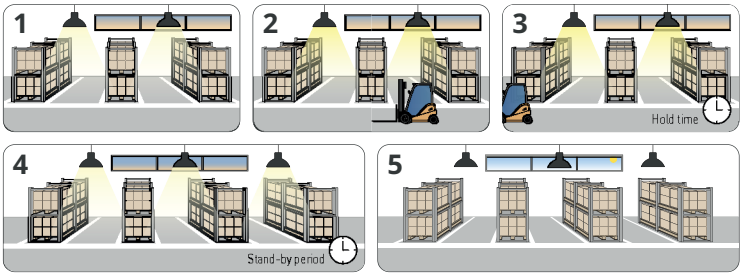

WITH DAYLIGHT THRESHOLD

1. With sufficient daylight, the light remains OFF even after motion is detected.
2. With insufficient daylight, the sensor turns light ON when motion is detected.
3. After there's no motion detected, the sensor keeps light ON 100 % for holdtime.
4. After holdtime, sensor dims light to standby dimming level for standby period. If the standby period has been set as Os, sensor turns light OFF automatically after holdtime.
5. The sensor turns OFF light automatically after the standby period when there's no motion detected.

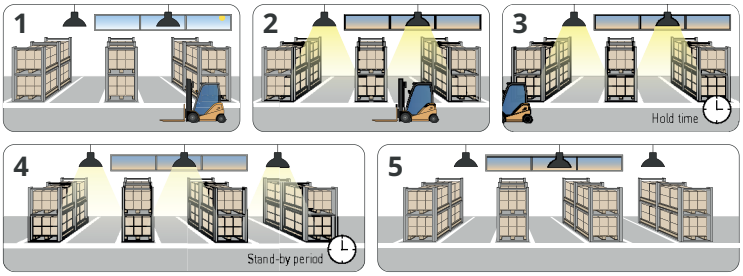

WITH DAYLIGHT DISABLED

1. Sensor turns ON light when motion is detected.
2. Light will stay on after detecting motion for the desired hold time.
3. Sensor dims light to standby dimming level after hold time if there is still no motion.
4. Sensor turns OFF light after standby period.

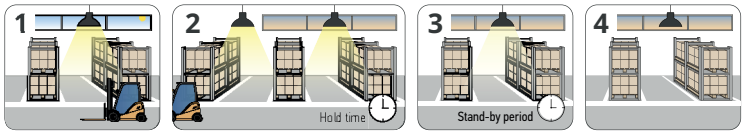

DAYLIGHT HARVESTING

1. When the ambient brightness is lower than the preset lux level, the sensor will automatically turn on the light and adjust the dimming according to changes in ambient brightness. As it gets darker outside, the fixtures will brighten, and as it gets brighter outside, the fixtures will dim.
2. When the ambient brightness exceeds the preset lux level, the light will turn OFF.

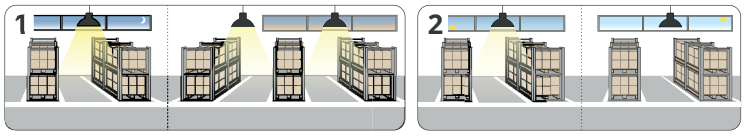

DAYLIGHT HARVESTING SETTING

1. Adjust "daylight" value higher than 50lux.
2. Preset "standby period" 0S.
3. Press "daylight harvesting" button on remote control to activate.

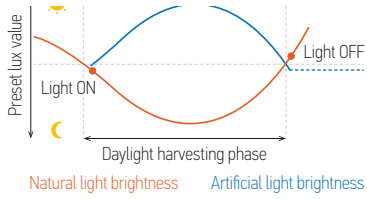

BUILT-IN MOTION SENSOR INFORMATION

SPECIFICATIONS		DEFAULT SETTING
Detection area	25 %/50 %/75 %/100 %	100 %
Hold time	5 s/30 s/1 min/3 min/5 min/10 min/20 min/30 min	10 min
Daylight threshold	2 lux (0.2 fc)/10 lux (0.9 fc)/30 lux (2.8 fc)/50 lux (4.7 fc)/ 80 lux (7.4 fc)/ 120 lux (11.2 fc)/disable	Disable
Standby period	0 s/10 s/30 s/1 min/5 min/10 min/30 min/60 min/+ ∞	0 s
Standby dimming level	10 %/20 %/30 %/50 %	10 %

SPECIFICATIONS	
Operating voltage	10 - 15 V
Operating current	< 10 mA
Mounting height	max 13.1 ft (4 m)
Detection radius	11.5 ft - 16 ft (3.5 m - 5 m)

BUILT-IN BATTERY BACK-UP INFORMATION

SPECIFICATIONS	FOR 2FT MODELS	FOR 4FT MODELS	FOR 8FT MODELS
Input voltage	100-347 Vac 50/60 Hz	100-277 Vac 50/60 Hz	100-347 Vac 50/60 Hz
Voltage	30-56 V	25-48 V	90-260 V
Input current	≤ 100 mA	100 mA max	100 mA max
Output current	143-266 mA	200-400 mA	≤ 250 mA
Output power	8W	10W	15W
Lumen	1,374 lm	1,637 lm	2,467 lm
Emergency time	≥ 90 minutes		
Indicator light	Illuminated test switch, indicator light		
Battery	Li-ion battery 7.4 V/2500 mAh	Li-ion battery 11.1 V/2000 mAh	Li-ion battery 11.1 V/3000 mAh
Charging time	24 hours	≥ 24 hours	

STANDARD OPERATION DISPLAY STATUS:

BUTTON FOR 2FT MODELS	BUTTON FOR 4-8FT MODELS	REMARKS
ON	ON	Charging mode, Battery is fully charged, AC power is ON
ON	OFF	Emergency mode, Battery is discharging, AC power is OFF

2FT MODELS



4-8FT MODELS



INSTALLATION GUIDE

Please read all the instructions below before installation!

IMPORTANT SAFETY INFORMATION

- Make sure that the supply voltage corresponds to the rated product voltage.
- The product must be installed by a qualified electrician in accordance with the National Electrical Code and corresponding local codes.
- If the product is damaged, do not use it.

⚠ WARNING

Risk of personal injury: read and follow all warnings and installation instructions. Keep or give to the owner for future reference.

Risk of cuts: Wear gloves to prevent cuts or abrasions when removing from carton, handling, installing, and maintaining this product.

Risk of electric shock: This product must be installed in accordance with the applicable installation code by a person familiar with the construction and operation of the product and the hazards involved.

Risk of Fire: Minimum 194°F supply conductors. Consult a qualified electrician to ensure correct branch circuit conductor.

Integrity LED assumes no responsibility for claims arising out of improper or careless Installation **or handling of this product.**

PACKAGE CONTENTS

DESCRIPTION	QUANTITY
LED Striplight Fixture	1
V Hook (A)	1
J-box mounting plate (B)	1
Box	1

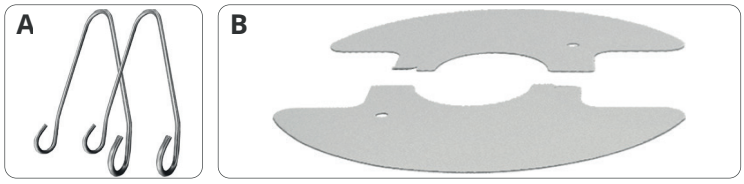

CHAIN MOUNT INSTALLATION

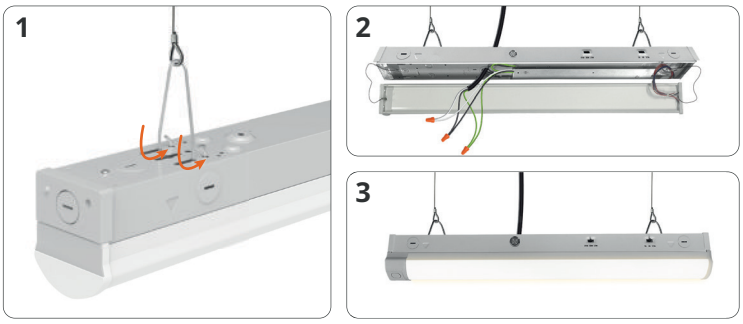

1. Attach the V-hooks to the back of the fixture body, then insert a chain onto each hook. Secure the chains to the ceiling and adjust them until the fixture is balanced and stable.
2. Attach the end of metal hose to the outlet hole. Open the fixture body and connect the wires: Black to Black, White to White, Green to Green.
3. Close the fixture body to complete the installation. Adjust the switches on the side of the fixture to select your preferred color temperature and wattage.

CONNECTING MULTIPLE FIXTURES

sold separately



1. Use a screwdriver to remove the screws from the adjacent end covers of the fixture bodies that need to be connected.
2. Mount the second fixture on the wall next to the first one, ensuring the two knockout holes in the center docking position are aligned and exposed.
3. Use the center connection bracket to join the fixtures and secure it in place with screws.

SURFACE MOUNT INSTALLATION

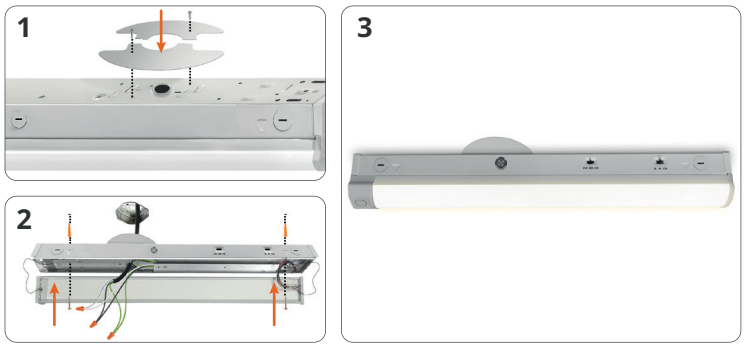

1. Secure the baffle onto the back of the fixture with screws.
2. Open the fixture by pressing the area between the narrow rectangular hole and snap-lock. Secure the luminaire to the ceiling with plastic anchors and screws (not included). Connect the wires: Black to Black, White to White, Green to Green.
3. Reattach the lens to the fixture. Choose preferred color temperature and power by adjusting switch positions on the side of the fixture.

* Please ensure that when installed in closets, IL-LSF8 has a minimum of 12 inches of clearance from the defined storage area.